A1 | TD-1152-9345 | B

Item Number	Document Number	Title	Material	Quantity
1	TD-1152-9346	MAUS - D2 BODY	Iron	1
2	TD-1152-9347	MAUS - D2 COILS	Copper	1
3	TD-1152-9348	MAUS - D2 COIL RAILS	Steel	1

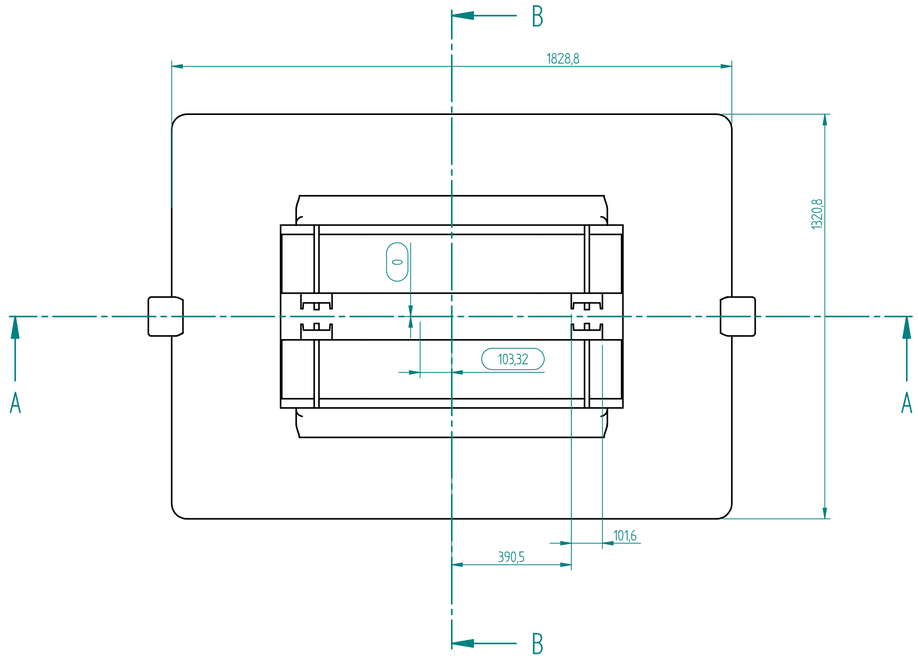

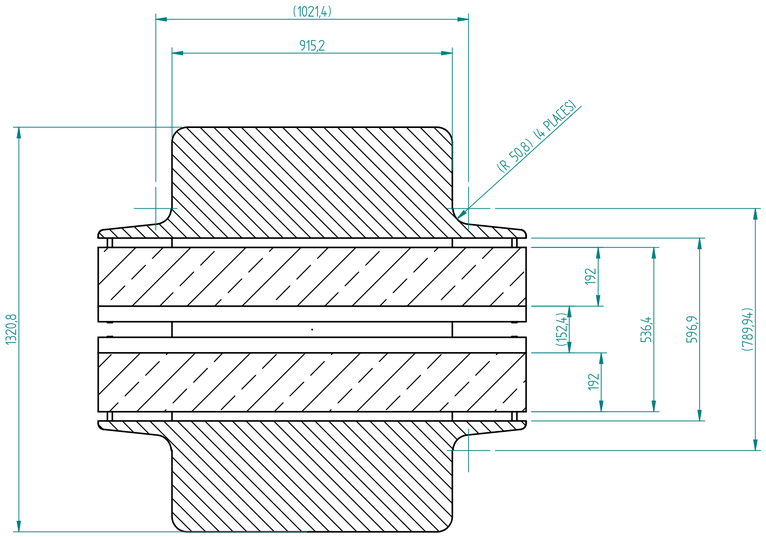

SECTION B-B

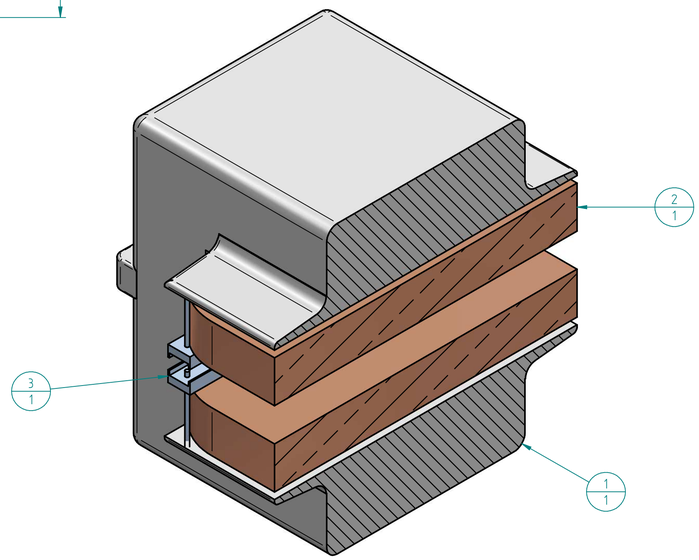

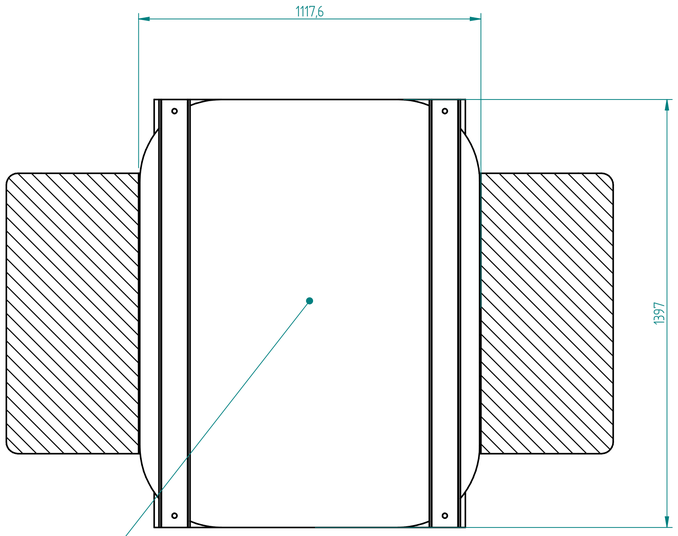

IS THE CORE OF THE MAGNET SECTIONS HOLLOW?

SECTION A-A

NOTES

1/ ALL DIMENSIONS SHOWN TAKEN FROM TD-1152-0733 BENDING MAGNET MODEL BY CONSTUCTION IN MODEL TD-1152-9344

B	Error: No reference	Error: No Mod No	J S TARRANT	Error: No reference	Error: No reference	MANUFACTURE ONLY WHEN STATUS IS **RELEASED**	**RELEASED**
ISSUE	DATE APPD	MOD. No.	DRAWN BY	CHKD BY	APPD BY		STATUS

© STFC 2012

PROJECTION

TOLERANCES UNLESS STATED
LINEAR ± SEE NOTE 1
ANGULAR ±

SURFACE TEXTURE N/A µm

DRAWING CONFORMS TO BS 8888 TOLERANCING ISO 8015

MATERIAL & SPEC.

MASS 16684.319 kg

FINISH N/A
REMOVE ALL BURRS

DIMENSIONS IN mm UNLESS STATED

PROJECTS & MECHANICAL ENGINEERING GROUP (RAL)

USED ON MAUS GEOMETRY

HARWELL SCIENCE & INNOVATION CAMPUS, RUTHERFORD APPLETON LABORATORY, CHILTON, OXON, OX11 0QX

MAUS - D2 ASSEMBLY
MICE INTEGRATION ENGINEERING

MICE TDR1.27

A1 | TD-1152-9345 | SHEET 1 of 1 | B

A1 | TD-1152-9345 | B